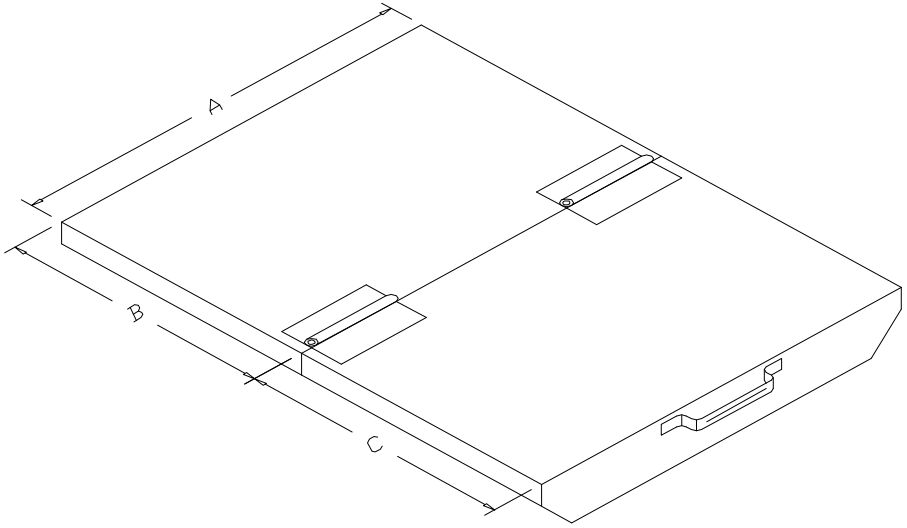


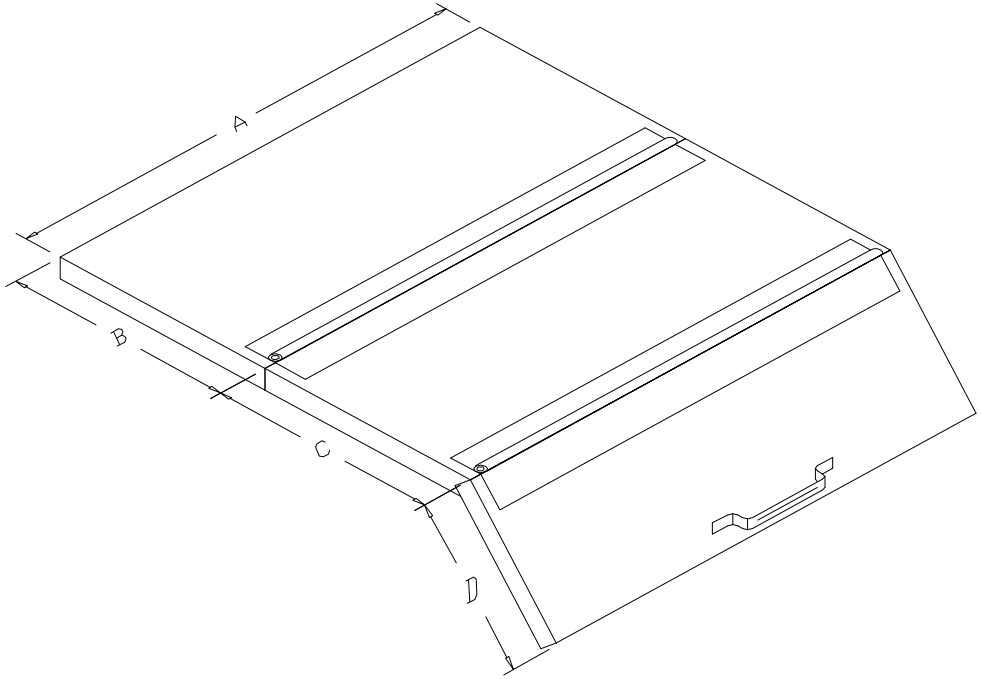


## Two Piece Lid Assembly

| Size | Part No. | A | B | C |
|---|---|---|---|---|
| 1/4 yd | 2533 | 35" | 21 3/8" | 21 5/8" |
| 1/3 yd | 3333 | 33" | 24 3/8" | 27 3/8" |
| 1/2 yd | 5033 | 38 3/4" | 26 1/8" | 26 1/8" |
| 3/4 yd | 7533 | 41" | 29 7/8" | 29 1/8" |
| 1 yd | 10033 | 41" | 33 7/8" | 30 3/8" |
| 1 1/2 yd | 15033 | 59" | 33 1/8" | 32 3/8" |

## Three Piece Lid Assembly

| Size | Part No. | A | B | C | D |
|---|---|---|---|---|---|
| GEN II 2 yd | 20033 | 59" | 30 7/8" | 29 1/8" | 16" |
| 2 1/2 yd (N) | 25033 | 48" | 30 7/8" | 32 3/8" | 26" |
| GEN II 2 1/2 yd (Y) | 26033 | 71" | 30 7/8" | 29 1/8" | 16" |
| 3 yd | 30033 | 59" | 30 7/8" | 32 3/8" | 26" |
| 4 yd | 40033 | 85 1/2" | 30 7/8" | 32 3/8" | 26" |
| 5 yd | 50033 | 105 1/2" | 30 7/8" | 32 3/8" | 26" |

All lid are made from 11ga. material

Note: All dimensions are approximate some dimensions may very slightly per lid assembly

UNLESS OTHERWISE SPECIFIED:
DIMENSIONS ARE IN INCHES
TOLERANCES
DECIMALS .XX ± .05 .XXX ± .010
ANGULAR ± 0.5°
DO NOT SCALE DRAWING

DRAWN | DATE
CHECKED
DESIGN

McCullough Ind., Inc.

Lid Basic Dimensions

SIZE B | FSCM NO. | DWG NO. | REV
SCALE None | SHEET 1 OF 1