240083

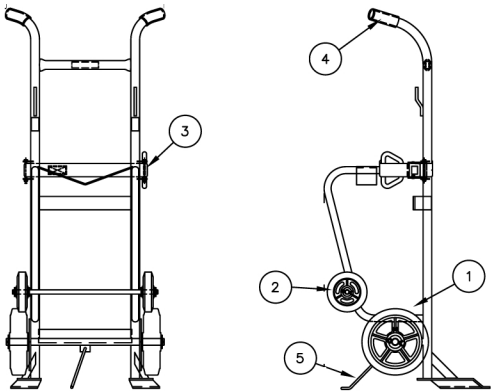

P/N 240083

Model: 50BT
Capacity: 1,000 lbs
Weight: 86 lbs
Wheel: 10" x 2–1/2" Moldon Rubber

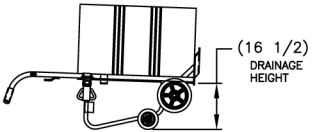

REPLACEMENT PARTS LIST

1	150596	WHEEL: "BT–1" 10 X 2.5"	2
	108208	WASHER: FLAT 1" SAE	6
	108218	COTTER PIN 3/16 X 1.5"	2
2	108839	WHEEL: 6 1–1/2"	2
	100051	FLAT WASHER 5/8 SAE	4
	108219	COTTER PIN 5/32 X 1	2
3	150303	STRAP: W/HANDLE, YELLOW	1
	108900	SCR: HEX HD 1/4–20 x 3	2
	108929	NUT: LOCK 1/4–20	2
4	108433	HANDGRIP: YELLOW 1–1/4"	2
5	109633	KICKSTAND	1
6	–	BOX	

PRINT ISSUED

NOV. 10, 2006

WESCO MANUFACTURING ENGINEERING DEPARTMENT

REV.	ECN & DATE	APP	REVISIONS
C	UPDATED 10–22–12	RWS	

WESCO INDUSTRIAL PRODUCTS INC.
NORTH WALES PENNA. 19454

PART NAME: 50BT DRUM TRUCKS

DRAWN: LDU 8–9–00
CHECKED:
APP. ENGR.
SCALE: 1" = 12"

TOLERANCE UNLESS OTHERWISE SPECIFIED
FRACTION ± 1/64 | 3 PLACE DECIMAL ± .005 | 2 PLACE DECIMAL ± .01
ANGULAR ± 1–1/2 | SHEET 1 OF 1
BREAK ALL SHARP EDGES AND REMOVE ALL BURRS

B– 240083 REV. C