219998

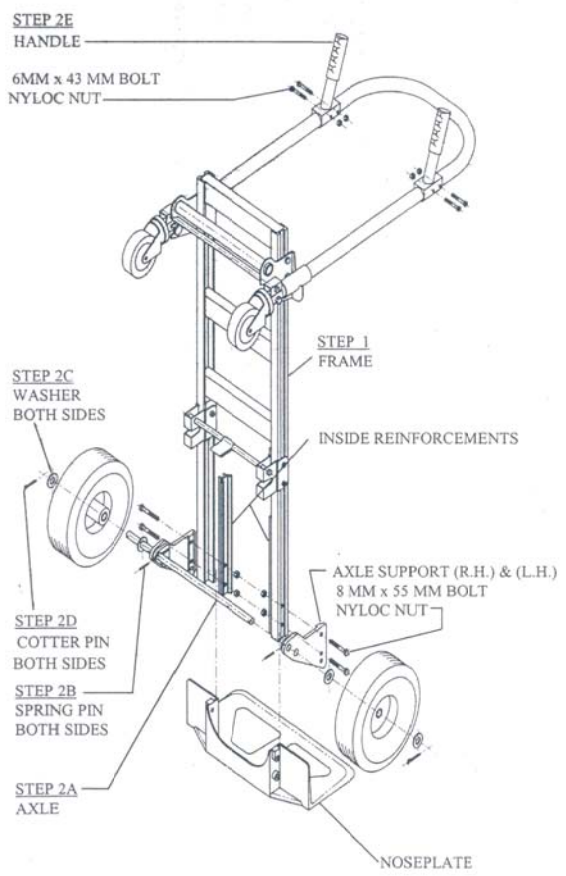

Spartan Economy 2 in 1 Truck

- Value–priced truck.
- Sturdy, light weight aluminum frame.
- 18" wide noseplate for large loads.
- Extra strength noseplate cast from special aluminum alloy.
- Non–marking 5" x 1.25" swivel casters.
- Pedal release allows easy conversion from 2–wheel to 4–wheel position.

Specs

P/N	219998
Model	SPRTN–JR–T18–SR
Overall width:	22"
Overall height:	52"
Overall depth:	19"
Capacity 2 wheel:	500 lbs
Capacity 4 wheel:	1,000 lbs
Frame bed:	12" x 38"
Wheel:	10" Solid Rubber
Caster:	5"
Weight:	50 lbs

THIS DRAWING IN ALL PARTICULARS IS WESCO INDUSTRIAL PRODUCTS INC. PROPERTY. ALL RIGHTS OF DESIGN, INVENTION OR USE OF ARE RESERVED.

	APP	REVISIONS	WESCO INDUSTRIAL PRODUCTS INC. NORTH WALES PENNA. 19454
	ECN & DATE		PART NAME: SPTN–JR–T18–SR
	REV.		TOLERANCE UNLESS OTHERWISE SPECIFIED: FRACTION ± 1/64; 3 PLACE DECIMAL ± .005; 2 PLACE DECIMAL ± .01; ANGULAR ± 1–1/2°; SHEET 1 OF 1; BREAK ALL SHARP EDGES AND REMOVE ALL BURRS

DRAWN:
CHECKED:
APP. ENGR.
SCALE:
B– 219998 REV C