Assembly Instructions
Heavy Duty Panel Cart #272227
Wesco Industrial Products Inc.
Lansdale, Pennsylvania 19446

Part #272227
Maximum Load Capacity 4400 lbs.
Deck Size 29″ wide x 36″ long
Caster 5″x 2″ Molded Polyurethane Two Rigid Two Swivel
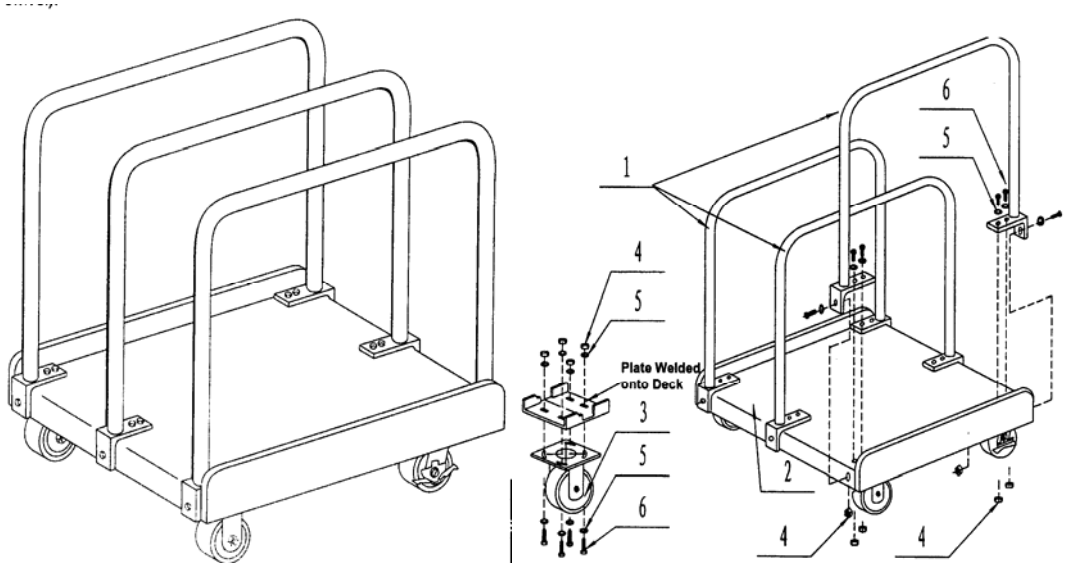
Drawing No.	Description	Qty.	Part No.
1	Tube Dividers	3	Non-Replaceable
2	Deck	1	Non-Replaceable
3,4,5,6	2 Rigid, 2 Swivel Caster, With Hardware #NOB-200	4	272276