261100

POWER LIFT TABLES

Features:

- Up to 6,000 lbs capacity.
- Standard floor lock holds table steady for loading and unloading.
- Easy to read illuminated battery status voltmeter.
- Three light LED battery charge status indicator.
- With a minimally charged battery, unit can be used while recharging.

Model:	**PLTL–20–2436**
Table Size:	24" x 36"
Lowered Ht:	30.5"
Raised Ht:	47.5"
Caster Size:	4"
Capacity:	2,000 lbs
Weight:	337 lbs

REPLACEMENT PARTS LIST

	1	051178	JACK: ASS'Y (23")	1
	2	109111	PUMP: HYDRAULIC, 12V, HORZ.	1
	3	109102	BATTERY	1
	4	109104	VOLTMETER	1
	5	052777	ASS'Y: BATTERY (–)	1
	6	052778	ASS'Y: BATTERY (+)	1
	7	109150	BATTERY CHARGER	1
	8	125828	HYDRAULIC HOSE	1
	9	052726	SUB–ASS'Y: REMOTE CONTROL	1
	10	150001	FLOOR LOCK	1
	11	053768	WHEELS	2
	12	054265–1	CASTER	2
*	13	050725	SEAL KIT	1

* NOT SHOWN

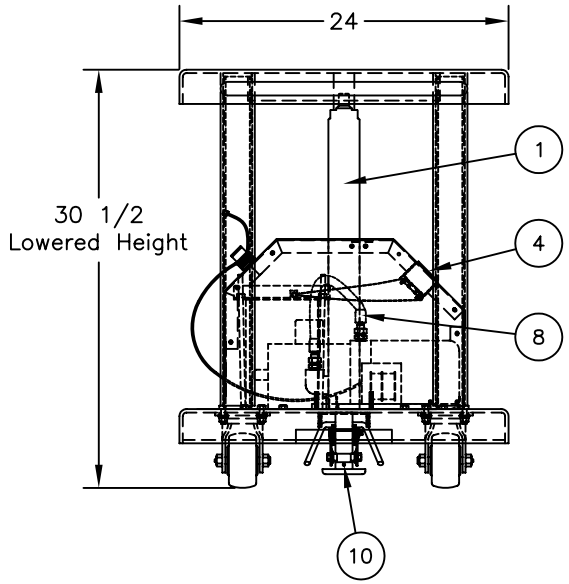

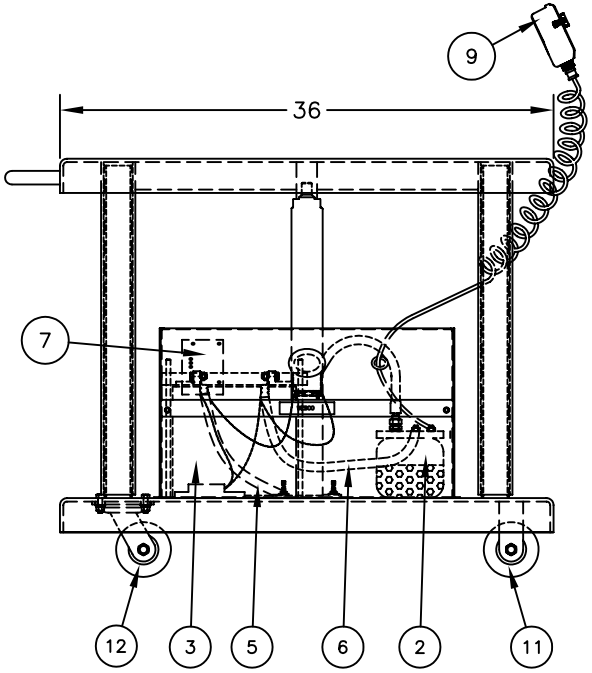

THIS DRAWING IN ALL PARTICULARS IS WESCO INDUSTRIAL PRODUCTS INC. PROPERTY. ALL RIGHTS OF DESIGN, INVENTION OR USE OF ARE RESERVED.

PRINT ISSUED

MAY 16, 2006

WESCO MANUFACTURING ENGINEERING DEPARTMENT

REV. | ECN & DATE | APP. | REVISIONS

WESCO INDUSTRIAL PRODUCTS INC.
LANSDALE PENNA. 19446

PART NAME: PLTL–20–2436

TOLERANCE UNLESS OTHERWISE SPECIFIED

FRACTION	3 PLACE DECIMAL	2 PLACE DECIMAL
± 1/64	± .005	± .01

ANGULAR ± 1–1/2° | SHEET 1 OF 1

BREAK ALL SHARP EDGES AND REMOVE ALL BURRS

DRAWN: KL 03–03–02
CHECKED: PS 03–05–02
APP. ENGR.
SCALE: 1" = 7"

C– 261100 REV